Karlsruher Glastechnisches Werk
ISOTHERM

Gablonzer Straße 6
D - 76185 Karlsruhe
Tel. 0721 / 95897-0
Fax. 0721 / 95897-77
E-Mail: info@kgw-isotherm.de
http://www.kgw-isotherm.com

Operating Instructions

Kaltgas System Type T-G
for direct tempering by a constant N2 gas flow

Contents

1) Safety instructions

2) Function and description of plant

3) Unpacking and initial inspection

4) Components of Kaltgas System Type T-G

5) Installation

6) Handling and function of safety controller

7) Commissioning of LN2 tank Type Apollo with LN2

8) Commissioning of Kaltgas System

9) Settings

10) Safety instructions

11) Maintenance and cleaning

12) Troubleshooting

13) Technical specifications

14) Warranty

15) Troubleshooting in Kaltgas Systems

16) Declarations of conformity

17) Layouts

18) Detail sketch of hose an HE- Leak test data

19) Test run

Safety instructions

1 IN GENERAL

This document contains general safety instructions in general, when using with liquid nitrogen.

The following instructions shall be respected while working with liquid nitrogen. To minimise the risk of accident and their consequences a few precautions should be taken, particularly related to:

- Oxygen deficiency
- Cryogenic burns
- Risks of explosion
- Oxygen enrichment

Once the users have been informed of risks and environmental conditions, all of them must be able to use liquid nitrogen in a safe way.

2 SAFETY INSTRUCTIONS

2.1 OXYGEN DEFICIENCY

The approximate composition of air by volume is as follows for its main components:

Oxygen O2	21 %
Nitrogen N2	78 %
Argon Ar	1 %

This gases are not toxic, but changes in their relative constituents, and particularly oxygen, have an effect on life and combustion processes. Therefore it is essential that theair we breathe should contain sufficient oxygen (> 19 %).

Our senses are incapable of detecting changes in the concentration of the constituents of air sufficiently quickly, since they are odourless and colourless.

2.1.1 Dangers

The risk of suffocation is high due to normal evaporation of liquid nitrogen to nitrogen gas that displaces oxygen in the inhaled air. For example, under standard temperature and pressure conditions (20° C; 1013 mbar), 1 litre of liquid nitrogen evaporates to 680 litres of nitrogen gas. The critical limit of oxygen can be easily reached.

Oxygen deficiency is dangerous and can cause death from suffocation.

The reaction of the organism to oxygen deficiency is different from one person to another. It is impossible to give any valid information in general about symptoms of a starting oxygen deficiency.

2.1.2 Causes

To protect yourself from risks of oxygen deficiency pay attention to following points:
- usage of liquid or gaseous nitrogen
- natural evaporation of liquid nitrogen
- refilling of liquid nitrogen
- leaks in storage tanks for liquid or gaseous nitrogen
- defective vent pipes or exhaust pipes
- tipping over the vessel

This list is not complete.

2.1.3 Recommendation

Proceed as follows to prevent the risks of oxygen deficiency:
- keep always the vessel in the vertical position
- close the vessel with an suitable lid
- do not put the vessel in bright sunshine or close to a heat source
- do not transport the vessel by car
- premises must always be well ventilated
- prevent strokes, avoid shocks and sudden movements
- wear always individual protective equipment (suitable gloves, safety goggles or protection visors and closed shoes)

- check the oxygen content continuously
- carry an oxygen meter
- train personnel

This list is not complete.

2.1.4 General behaviour to be followed in case of accident

Proceed as follows:
- mark the environment to prevent secondary accidents
- take action quickly: the rescuer must have taken individual protective measures (independent breathing protection apparatus)
- move the victim(s) away as quickly as possible
- pay attention to internal first aid rules of your plant
- ventilate the room sufficiently
- find out the reason of accident

This list is not complete.

2.2 CRYOGENIC BURNS

Liquid nitrogen is extremely cold (-196° C)

Parts of vessel that have been in contact with liquid nitrogen (especially while refilling) can burn the skin in case of contact.

2.2.1 Danger

Cryogenic fluids can:
- cause burns on the human body
- make materials (metallic or plastic) brittle in case they are not suitable for low temperatures
- cause strong nebulosity, depending on the air humidity of premise

2.2.2 Causes

There are two kinds of cryogenic burns:

2.2.2.1 Burns by splashes

It is important to protect yourself against the risk of splashes while using liquid nitrogen, especially when handling with samples. Splashes can cause cryogenic burns that can have serious consequences, especially when hitting eyes or face.

2.2.2.2 Contact burns

Contact between skin and cold materials causes frostbites or cryogenic burns. Never touch or grip the inner side of vessel or samples with a bare hand.

2.2.3 Recommendation

Proceed as follows to prevent the risks of burns:
- prevent skin contact with cryogenic liquids
- never touch the cold walls of vessel, or un-insulated or frosted equipment
- wear individual protection equipment (suitable gloves, safety goggles or protective visors and closed shoes)
- always hold the vessel in the vertical position
- use only suitable equipment (metal or PTFE hose) for refilling the container
- train personnel

This list is not complete.

2.2.4 General behaviour to be followed if liquid nitrogen is splashed

2.2.4.1 In the eyes

- wash the eye with a generous supply of water for at least 15 minutes
- pay attention to internal first aid rules of your plant
- consult a doctor

2.2.4.2 On the skin

- do not rub
- if possible, remove or loosen your cloths
- defrost affected parts by moderate and progressive heating
- do not apply anything on the burned area
- pay attention to internal first aid rules of your plant
- consult a doctor

Both lists are not complete.

2.3 THE RISK OF EXPLOSION

2.3.1 Dangers

The evaporation of liquid nitrogen can causes an overpressure inside of the vessels.

2.3.2 Causes

The increase of pressure in the vessel may happen due to:

- poor maintenance of the container
- accumulation of ice on the neck and the lid

This list is not complete.

2.3.3 Recommendation

Proceed as follows to prevent the risk of explosion:

- always use a suitable lid (pay attention to an exhaust gas opening)
- respect filling levels to prevent the formation of ice on the lid
- use the vessel only in dry and sheltered locations
- control the humidity of the room
- check vessel periodically with regards to accumulations of condensation water
- check vessel periodically with regards to surface defects and material damages

This list is not complete.

2.3.4 General behaviour to be followed in case of accidents

Please see above under 2.1.4, oxygen deficiency.

2.4 OXYGEN ENRICHMENT

2.4.1 Dangers

Oxygen enrichment can enlarge the risk of explosion or fire.

2.4.2 Causes

Oxygen enrichment, as a result of liquefaction of ambient air, can occur, because the boiling point of oxygen is high (-183° C) than the boiling point of liquid nitrogen (-196° C).

2.4.3 Recommendation

Proceed as follows to prevent the risk of explosion in case of oxygen enrichment:

- do not smoke
- eliminate easily inflammable products from the area of vessel, if possible

- eliminate all sources of fire (flames, sparks, matches, lighters, etc.)
- premise of vessel must be continuously and adequate ventilated
- clean the floor regularly
- train personnel
- wear individual protection equipment
- check the oxygen content continuously
- always wear an oxygen meter

This list is not complete.

2.5 ENVIRONMENT OF VESSEL

2.5.1 The premise

The premise of vessel shall:

- enable safe operation for participants
- enable a safe refilling of vessel
- be continuously and adequate ventilated
- have a flat and non-porous floor, capable of resisting the maximum load of vessel
- include posters (safety data sheets) mentioning the dangerous properties of liquid nitrogen
- prevent access to unauthorised persons
- enable a good accessibility of vessel for inspection, cleaning and maintenance

This list is not complete.

Kaltgas System for direct gas cooling

The Kaltgas System Type T-G is a high-performing cooling system for tempering by means of a cold gas flow. The high cooling performance of the system is based on the cooling capacity of liquid nitrogen.

2. Function and description of plant

Liquid nitrogen is heated in a LN2 storage tank by means of a vaporizer (JET). The cryogenic gas flow is then piped through a vacuum insulated pipe to the gas outlet nozzle. The vacuum insulated pipe is equipped with a heat exchanger (HEATER) which heats the cold nitrogen gas to the temperature set on the controller.

The temperature sensor (PT100) installed downstream of the heat exchanger measures the temperature in the gas flow before the gas enters the gas outlet nozzle. The capacity of the vaporizer (JET) determines the cooling capacity while the capacity of the heat exchanger (HEATER) determines how much the gas is heated up. At the gas outlet nozzle, a temperature-controlled gas flow is available which can be kept stable up to a temperature of a max. of -170°C.

The high insulation capacity in the system is obtained by using vacuum insulated components which significantly reduce the heat impact of the ambient temperature on the cold gas flow. The insulation vacuum required is generated by a vacuum pump. The vacuum connection between the pump and the cold gas line is realized by a flexible corrugated hose and a vacuum valve.

3. Unpacking and initial inspection

Please unpack all parts carefully and check them for damage. It is important that any transport damage be detected when the parts are unpacked. Any defects / damage must be documented immediately. Please inform the manufacturer.

- For the permissible ambient conditions, refer to the technical data of the temperature controller.
- Before commissioning the plant, check if your mains voltage is 230V ~ 50 Hz.
- Please comply with the safety instructions for liquid nitrogen.

4. Components of the Kaltgas system type T-G

- LN2 transfer syphon Equipped with:	- NW 50 flange for connection to the storage container - Heater (Jet 500W) Length 920mm - Alu- evaporater- standard
Kaltgas pipe prepared for evacuation	see attached sketch
Safety controller SL1	- Connector for evaporator (Jet)
Electrical Connector	- Safety Controller evaporator (Jet) Connection wire (grey) Power supply 230 V
Vacuum pump	- Vacuum pump RZ6 with spare parts and vacuum conduit pipe: length 2m
LN2 storage container	- cap. 50L type “Apollo 50”

5. Installation

In order to ensure a smooth operation of the Kaltgas System, please install the system in the given order.

1. Fix and secure cold gas line to object to be cooled. Provide a strain relief, if necessary.

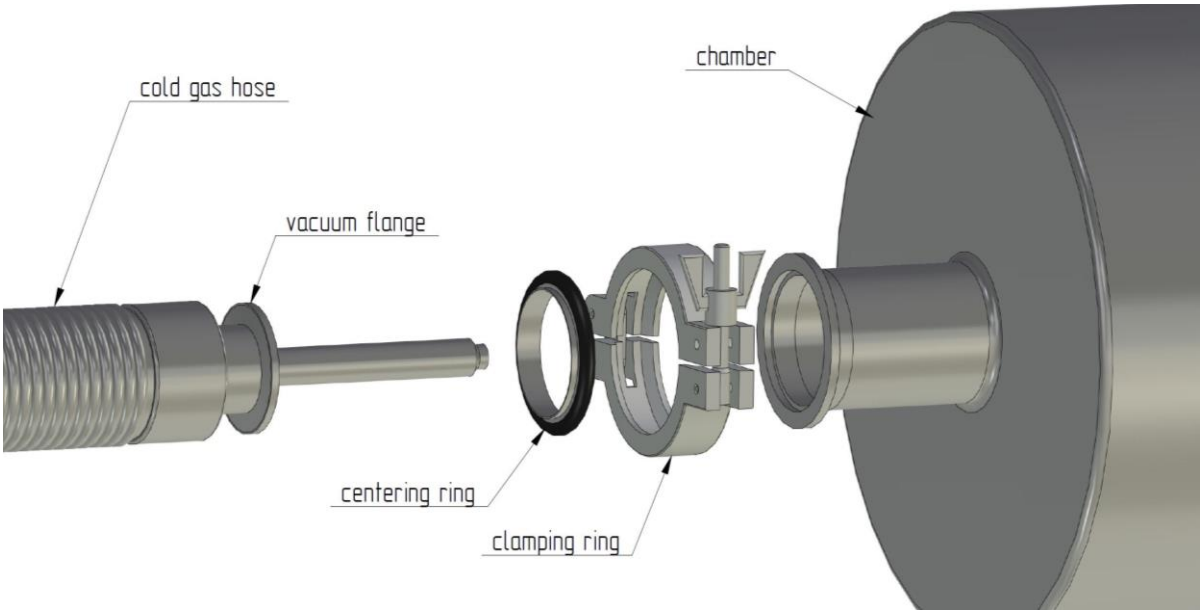

2. Using the corrugated hose to connect the cold gas line to the vacuum pump and using the vacuum pump, evacuate the cold gas line for at least 20 minutes before the start of the work.

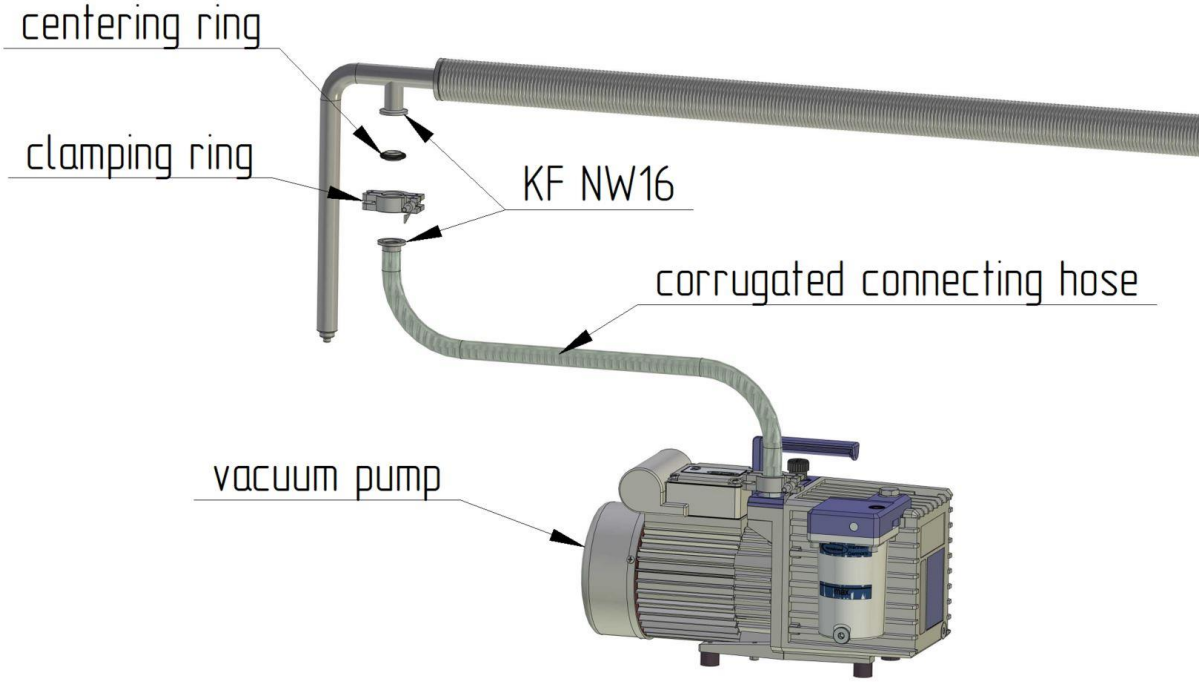

3. Install LN2 storage tank at place of installation.

4. Place the centering and O-ring over the LN2 evaporator and place the JET "slowly" into the LN2 tank, otherwise LN2 may spurt out of the vessel in an uncontrolled manner. Secure lifter with clamping ring.

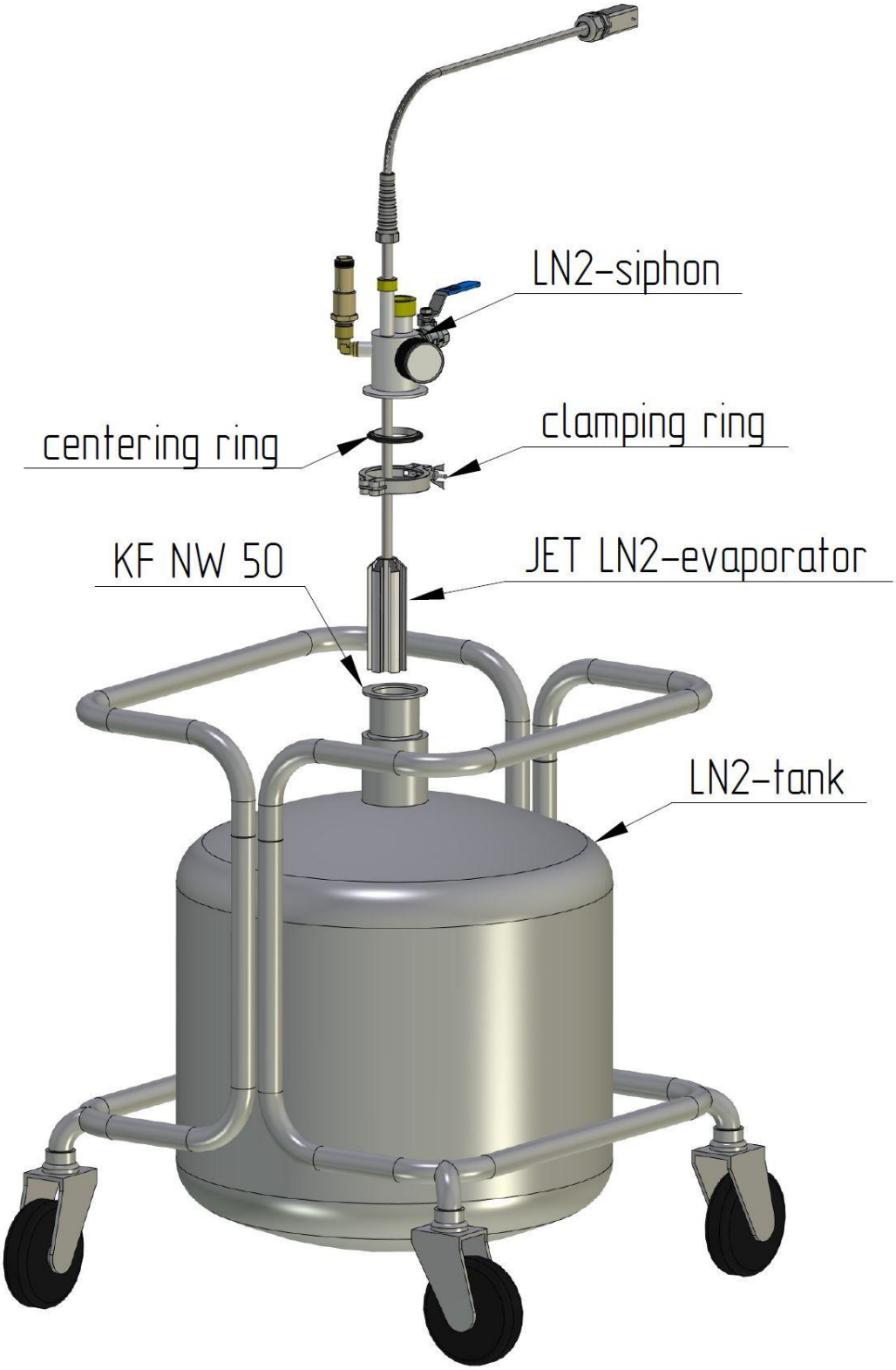

5. Insert cold gas line in squeeze connection of siphon and secure it.

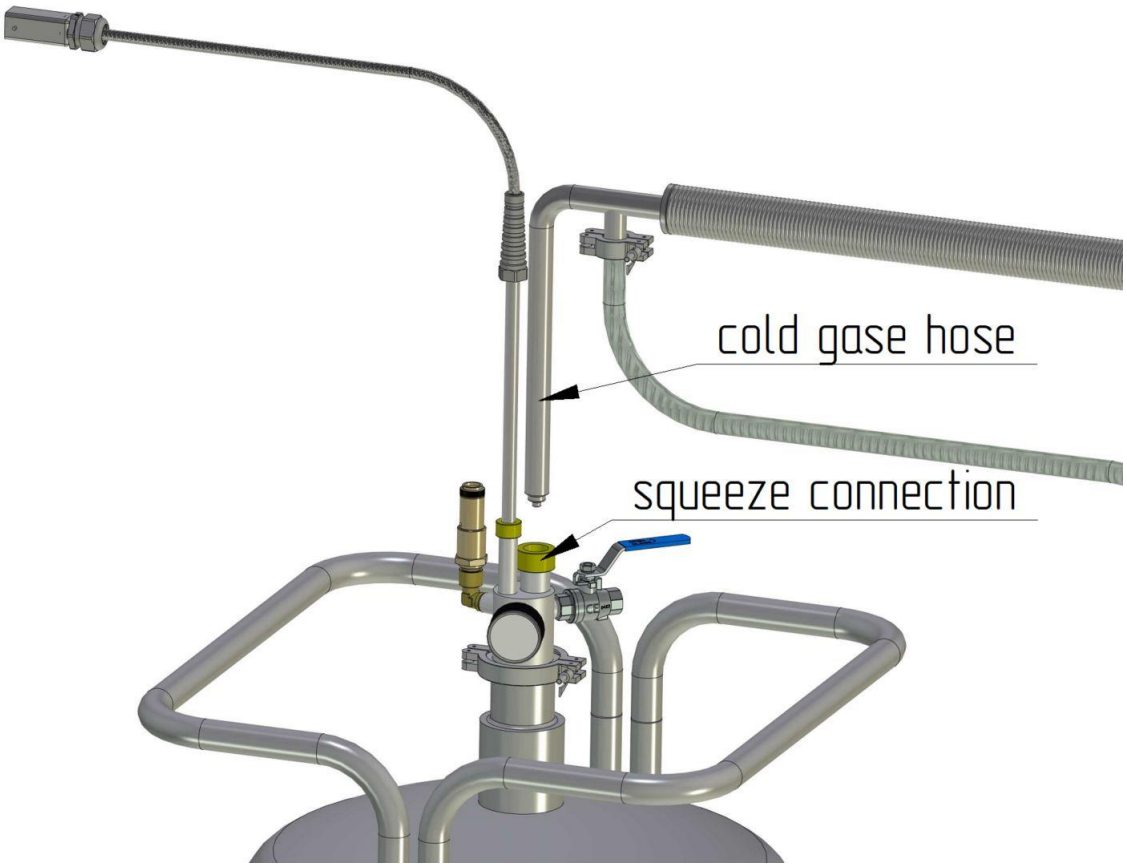

6. Electrical connection

a. vaporizer (Jet) - extension cable **grey** - safety controller (Jet)

b.. vacuum pump - mains (mains plug 230V)

c. safety conrtol unit SL1 - mains (mains plug 230V)

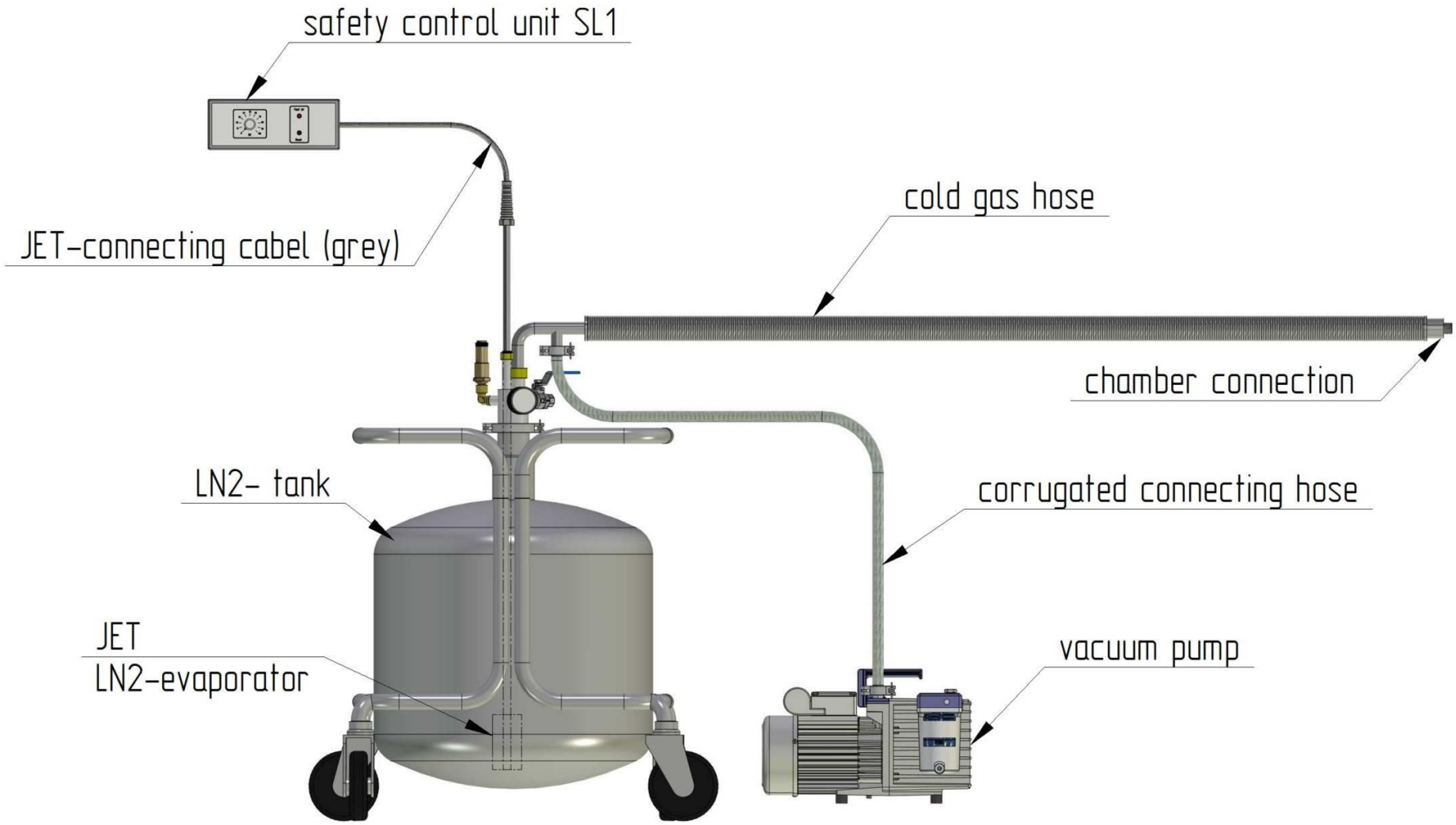
safety control unit SL1
JET-connecting cabel (grey)
cold gas hose
chamber connection
LN2- tank
corrugated connecting hose
JET
LN2-evaporator
vacuum pump

6. Handling and Functionality of the Security Controller

6.1. Mounting Back side

a) Connect the LN2- evaporator (Jet) with the corresponding socket at the security controller, Connection wire grey

b) Set the power supply

6.2 Mounting Front side

a) After all electrical wires are connected, the assembly is mounted completely and the LN2 container is filled with LN2 then the security controller can be switched on back sides.

b) Power control for LN2 heater 0 – 100%
Place the power control of the LN2 heater on 0% while switching that the Jet can not evaporates the LN2 directly.

C) After switching on the Security controller the Light “FAULT” will shine up.
Now the functional safety control system will be activated through pushing the button.

1) Push the JET Button (Lamp Jet switches off)

2) Security light FAULT has to get off now.

After that the Security Controller is activated and through turning of the power controller (0-100%) the LN2 gas flow for cooling will be generated.

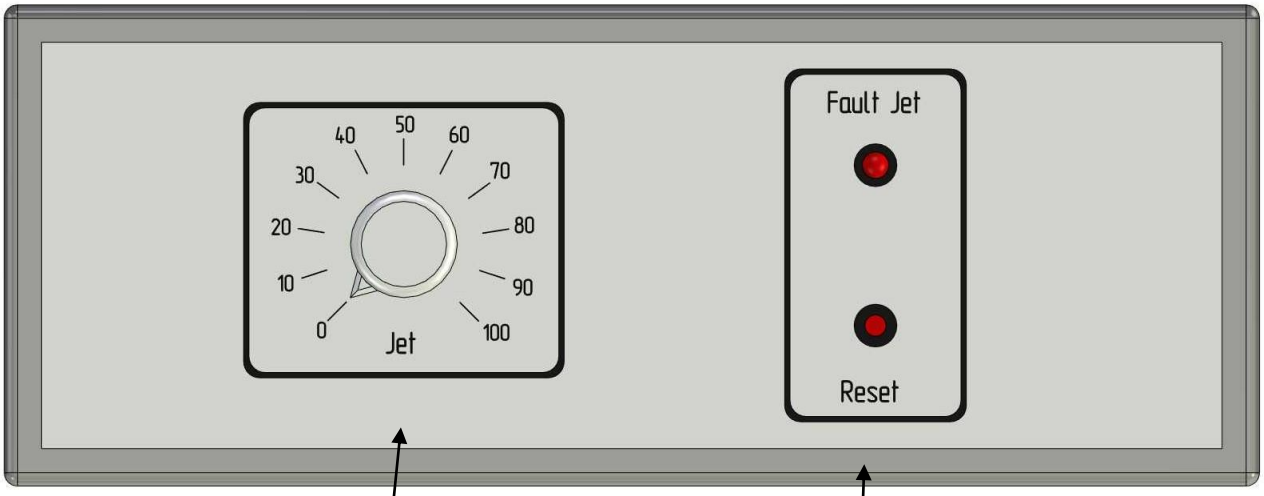

Power Controller

LN2 evaporator

Safety switch JET

Anschluss JET

Power connection

and fuse

Jet = LN2 evaporator

Connector pin list
Switch off temperature +170°C

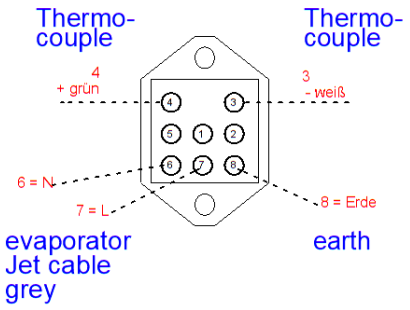

7. Commissioning of LN2 tank Type Apollo with LN2

Important: Wear safety gloves, goggles.

Please comply with the operating instructions supplied with the tank. In addition comply with the applicable BG , GGVSE / ADR and internal directives.

Important: In the case of small, insufficiently ventilated rooms, an oxygen measuring instrument with warning signal must be used.

7.1 The tank is delivered in original condition with the LN2 tapping siphon in place.

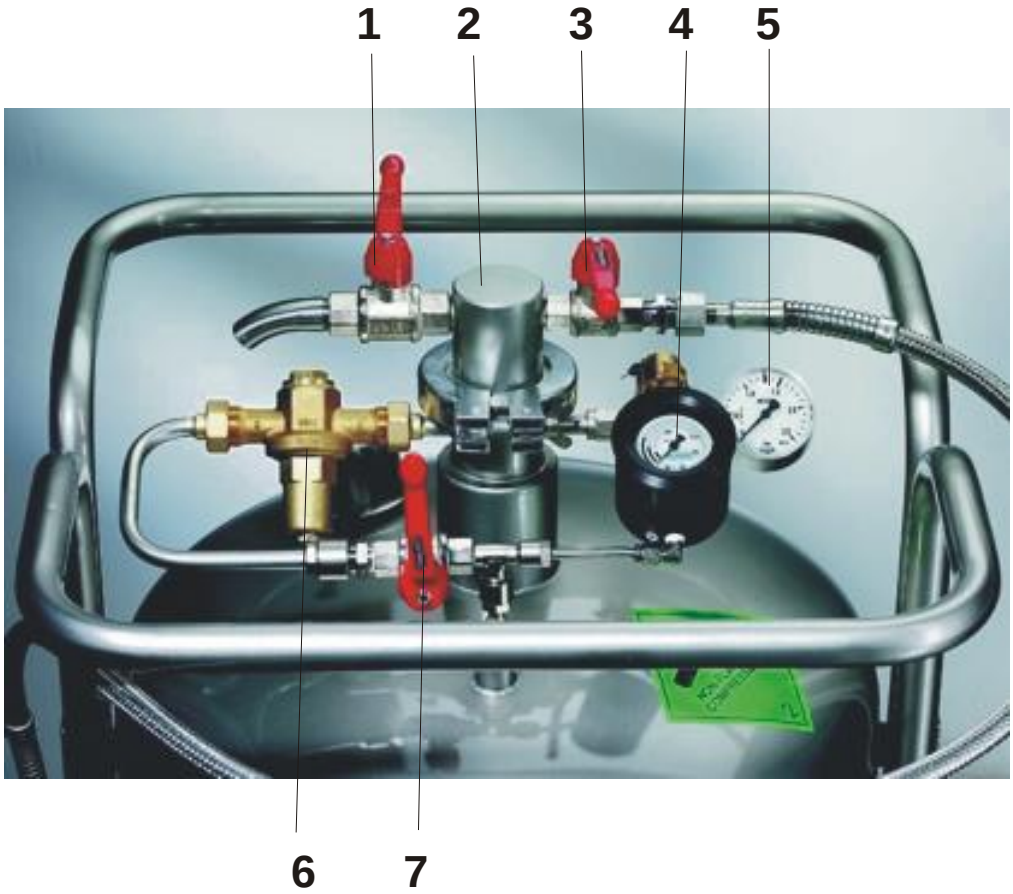

1) Pressure relieve valve
2) Transfer siphon (centre part)
3) Valve for LN2
4) Pressure build up manometer
5) Pressure manometer tank
6) Safety valve
7) Valve for Pressure building

Important: When handling LN2, always wear safety gloves and goggles.

a) Open pressure relief valve (no. 1) in order to allow any overpressure that may be present in the tank to escape.

b) Open quick-acting fastener on siphon (no. 2) and pull siphon out of tank. The metal hose on the siphon is removed, too.

c) Pressure build-up controller, if installed, must not be manipulated by the user. Any modifications or settings may only be performed by the manufacturer or trained staff.

d) Pressure build-up valve (no. 7) is always closed when used with the Kaltgas System. If the pressure build-up valve (no. 7) were opened, an uncontrolled gas flow would be generated. Temperature-stable control of such a gas flow would not be possible.

e) The LN2 tank Apollo is brought to the LN2 filling station without the siphon. In order to prevent penetration of atmospheric moisture, the supplied loose sealing plug is fixed to the tank neck (KF NW 50).

f) After the tank has been filled with LN2, it is transferred to the Kaltgas System, and the LN2 vaporizer (Jet) is inserted in the tank slowly.

g) When the LN2 vaporizer is inserted, increased gas generation occurs in the cooling phase of the aluminium heat exchanger and the heating element. This may cause an overflow of LN2.

In order to prevent the LN2 from spilling, the LN2 vaporizer must be inserted slowly (takes approx. 2 minutes)

8. Commissioning of Kaltgas System

The cold gas hose is equipped with a locking mechanism both on the gas input and the gas output side. The two locking mechanisms prevent moisture from penetrating the hose. Any moisture in the cold gas hose might result in the formation of ice droplets during commissioning of the Kaltgas System and clog the cold gas hose so that the cold nitrogen gas can no longer flow through the line. This would result in overpressure in the vaporizer Dewar and opening of the 0.5 bar valve.

Closing the cold gas hose is particularly important after a cooling process. After a tempering process, the whole hose interior has cooled down so much that the moisture from the ambient air would condense in the hose immediately, which would result in significant formation of condensation water and the risk of ice forming in the hose.

To avoid this, the order of closing the cold gas hose specified here must be kept in any case.

After a cooling process, set the Jet (LN2 vaporizer) to 0, than wait until no more gas escapes from the cold gas nozzle. Open the pressure relief valve on the siphon. Next, close the cold gas nozzle using the supplied locking mechanism to prevent penetration of condensation water or the formation of ice in the gas outlet area. Then pull out the cold gas hose from the vaporizer Dewar (squeeze connection siphon) and protect it against penetration of condensation water using the sealing socket. The overpressure forming as a result of the heating of the gas in the cold gas hose can escape through the valve provided at the sealing plug. The locking mechanisms remain at the hose until the next cooling operation.

Before commissioning the Kaltgas System, read the controller operating instructions and follow the instructions on the safety controller. For commissioning, proceed as follows:

8.1. Switch on vacuum pump and wait for 10 minutes until the required vacuum is reached.

8.2. Remove cold gas line from siphon and open N2 valve on siphon.

8.3. Take off the siphon with the LN2 vaporizer Jet from the storage tank and fill the tank with liquid nitrogen (LN2).

8.4. Place centring and O-ring Ring NW 50 on the tank flange and immerse the vaporizer in LN2 carefully. The vaporizer should have a distance of 1-2 cm from the bottom of the LN2 tank.

Warning!! Immerse the vaporizer in liquid nitrogen slowly !
Due to high gas formation during immersion, LN2 may spill out.

Important: Wear safety gloves and goggles.

8.5. Place siphon on tank flange and secure with fastening ring.

8.6. Insert and lock cold gas line in squeeze connection.

Warning: Cold gas line has not be immersed in liquid nitrogen ! !

8.7. Close exhaust gas valve.

During operation, always ensure that the pressure indicated by the manometer does not exceed 0.4 bar (if necessary, stop cooling operation because the cold gas line may be clogged by ice).

8.8 Switch on safety controller with temperature controller.

8.9. Set evaporator power to required value.

9. Operational settings

9.1 Standard operational settings of the Safety Controller SL1

The safety controller SL1 was configured with default operating settings.
These standards - operating settings relate first and foremost on the safety monitoring of the Jet.

!! Important !!
All heaters are equipped with an internal thermoelement which will be used as a security temperature controller to protect the heater against overheating.

Safety-switch off temperature of the Jet: intern. max. +170°C

Attention:
After cooling, please leave the exhaust valve of the transfer siphon closed, that there will be no gas flowing through the Kaltgas pipe because of self-evaporation, to avoid icing of the inner pipes.

Immediately after dismounting the KALTGAS hose from the LN2 storage container, the openings for the gas has to be close with the attached closing mechanism to **10.**

10. Safety instructions

- Plant must always be supervised during operation !
- Plant may be commissioned only if sufficient liquid nitrogen is in the nitrogen storage tank !
- Work on the controller may only be carried out by qualified technical staff
- Energized parts must be protected against dust, moisture, impact, overheating
- Follow safety instructions when handling liquid nitrogen, refer to EC safety data sheet according to TRGS 220 by AIR LIOUIDE dated 29 August 2002 (Wear safety goggles and gloves)!
- Containers filled with liquid nitrogen must not be sealed gastight if no safety valve is provided.
- Follow safety instructions of supplied operating instructions!
- After operation, keep exhaust gas valve closed!
- Before stopping vacuum pump, close vacuum valve!

11. Maintenance and cleaning

Disconnect all devices from power supply. The temperature controller and the safety controller generally do not require any maintenance. If these components need repair, they may only be opened by the manufacturer.

All electrical components may only be cleaned with a dry cloth. Pay attention that no water enters the inside of the devices.

12. Troubleshooting

Normally, the system should work trouble-free. If a error occurs, please follow the following troubleshooting program.

Identified defect	Possible cause	Repair of defect
No tempering gas comes out of the cold gas nozzle	- Jet out of service - exhaust gas valve open - vaporizer defective - interior of cold gas line iced pressure in tank > 0.4 bar	- start Jet. - close exhaust gas valve. - check vaporizer resistance. The resistance betw. Pin 1 and Pin 3 must be approx. 52 Ohm ! have Jet replaced, if necessary. - shut down system, open exhaust gas valve, allow cold gas line to thaw and purge moisture with hot nitrogen gas.
Cold gas hose iced	- vacuum pump defective - cold gas hose vacuum leak	- check pump using vacuum measuring instrument - carry out He leak test on cold gas hose
Cold gas hose Fixed	Vacuum defective	Send us Cold gas pipe for testing

13. Technical Specifications

13.1 Safety controller SL1

Mains voltage	: 230V ~ 50 Hz.
Connections	: - JET (Stakei 5 – femal connector)
ambient conditions	: 10 to 50°C, max. 75% rel. moisture

13.2 Jet 500Watt / 920mm

Power supply	: 230V ~ 50 Hz;
Heating element, Ø x length	: 12.5 x 1200 mm / approx. 52 Ohm
Male connection	: Harting 7D
NiCr-Ni at 20°C	: 8,9 Ohm

13.3 Jet - extension cable grey

Connection SL 1	: Stas 5 male connector
Connection Jet	: Harting 7D female connector

13.4 Nitrogen consumption at 500 Watt:

Minimum (at P_{Jet} = 10%)	: approx. 2,2 L/h
Maximum (at P_{Jet} = 100%)	: approx. 22 L/h

14. Warranty

We provide a 12-months warranty, provided that the equipment is handled properly. The warranty cover shall not exceed the purchase value of the equipment. In the case of warranty claims, please contact the manufacturer.

KGW	FORMBLATT	QUALITÄTS MANAGEMENT

Prüfblatt Kaltgas Jet / LS. Nr.:

Kapitel 10	Formular 10/2TG-RD	Ausgabedatum: 19 Jan. 1998

Heizer für LN2-Verdampfer, Jet
Länge: 1200 mm
Leistung: 500 Watt / 230 Volt / 50Hz

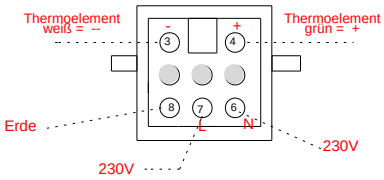

Heitstab- und Thermoelementdaten
Thermoelement: -0,17 mV bei Raumtemperatur
Thermoelement: 10,4 Ohm bei Raumtemperatur
Heizer: 100,2 Ohm bei Raumtemperatur
Raumtemperatur 22 °C

Elektrischer Kontakt zwischen Heizer und Thermoelement
Kontakt [redacted] nein

Durchgangsprüfung der Erdung zwischen:

Erde	Mantel	ja	[redacted]
Erde	Heizer	[redacted]	nein
Erde	Thermolelement	[redacted]	nein

Geprüft durch: M.Schieder
Datum: 18.02.2019

Nummer des Heizstabes:

Heberkopf für Jet Kaltgas Vakuumschlauch

0,5bar Sicherheitsventil	ja	[redacted]
Manometer	ja	[redacted]
Abgashahn	ja	[redacted]

Geprüft durch: Herr Martini

Datum: 13.02.2019

15. Fault Finding with Kaltgas cooling systems

In order to achieve a quick fault detection, we compiled a fault finding that enables the user to localise the occurring fault with the Kaltgas cooling system. The following additional parts are necessary:

1 piece	Dummy plugs for Heater and Jet (the dummy plugs bypass the thermo element monitoring in the heating elements)
1 piece	Dummy plug Stas5 for SL1 Security Controller (this Dummy plug get through the thermo element surveillance of the security controller.)
1 piece	Voltmeter for measuring the ohmic resistance.
1 piece	Data sheets (Jet and Heater), see documents Kaltgas cooling system

15.1 Proceeding

First, all electrical data of the heating elements (Jet and Heater) have to be tested with the voltmeter referring to the ohmic resistance, data see “Test Sheet Standard Evaporator”, and with regard to a possible short circuit between heating, thermo element and earth. The results have to correspond with the data on the “Test Sheet Standard Evaporator”.

In case, the resistance data and the short circuit testing do not result in differences, the further testing could be continued.

1) Installation of the Kaltgas cooling system complete with all connection cables.

   a) Jet (LN2-heating element) – connection cable – safety controller

2) Now, switch on the safety controller first. The installed alarm signal is audible. Please wait for about 5 seconds, and then press the reset button “Jet” and subsequently the reset button “Heater”. The three lamps above the reset buttons as well as the alarm signal have to be extinct.

If one of the safety circuits cannot be activated by the reset button, the corresponding lamp will not be extinct and the alarm signal is still audible.

The defective safety circuit is determined and the fault finding could be started.

E.g.: The lamp above the “Jet” button is not extinct after the reset. Therefore, the fault has to be found in this particular circuit. Now, the fault finding can be executed step by step:

3) Switch off safety controller

4) Remove the Jet's extension cord from the safety controller and put one of the dummy plugs in the jack (the thermo element is bypassed). Then switch on the safety controller and activate it according to description under point 2).

a) After pressing the reset buttons, the lamp "Jet" is not extinct. Thereby, the safety controller is defective and has to be sent to KGW for inspection.

b) If the lamp is extinct at the safety controller, it has to be switched off and the connection cable to Jet will be connected with the safety controller. Afterwards, the dummy plug will be connected with the connection cable and the safety controller will be switched on.

c) After pressing the reset buttons, the lamp is not extinct. Then, the connection cable is defective and has to be sent to KGW for inspection. If the lamp is extinct after reset, then, the Jet is defective and has to be sent in for inspection.

The same proceeding can be applied to the Heater. Herewith, it is possible to effect an exact fault detecting and KGW can launch the necessary steps to repair your system.

For further questions, we are at your disposal call: 0049 721 95897-77, by fax or via Email: info@kgw-isotherm.de .

16. Declarations of conformity

16.1 Declarations of conformity for the vacuum pump Vacuubrand

Machine directive (with modifications)
89/392/EWG
91/368/WEG
93/44/EWG
93/68/EWG

Low tension directive
73/23/EWG
93/68/EWG

Directive electromagnetic compatibility
89/336/EWG
92/31/EWG
93/68/EWG

Applied harmonized rule
EN 292-2
EN 61010-1
EN 1012-2
EN 61326
EN50082-2

16.2 Declarations of conformity for the safety – controller Messner SL1

Directive electromagnetic compatibility
(89/336/EWG)

Low tension directive
73/23/EWG

16.3 Declarations of conformity for the heaters Stegmeier

Low tension directive
73/23/EWG
VDE-sign, proved and certified according to
DIN EN 60 335 Teil 1: 1995-10 (VDE 0700 Teil 1)

16.4 Declarations of conformity Cryotherm

If available
With an working pressure higher 1,3bar overpressure directive 97/23/EG

17. Layouts

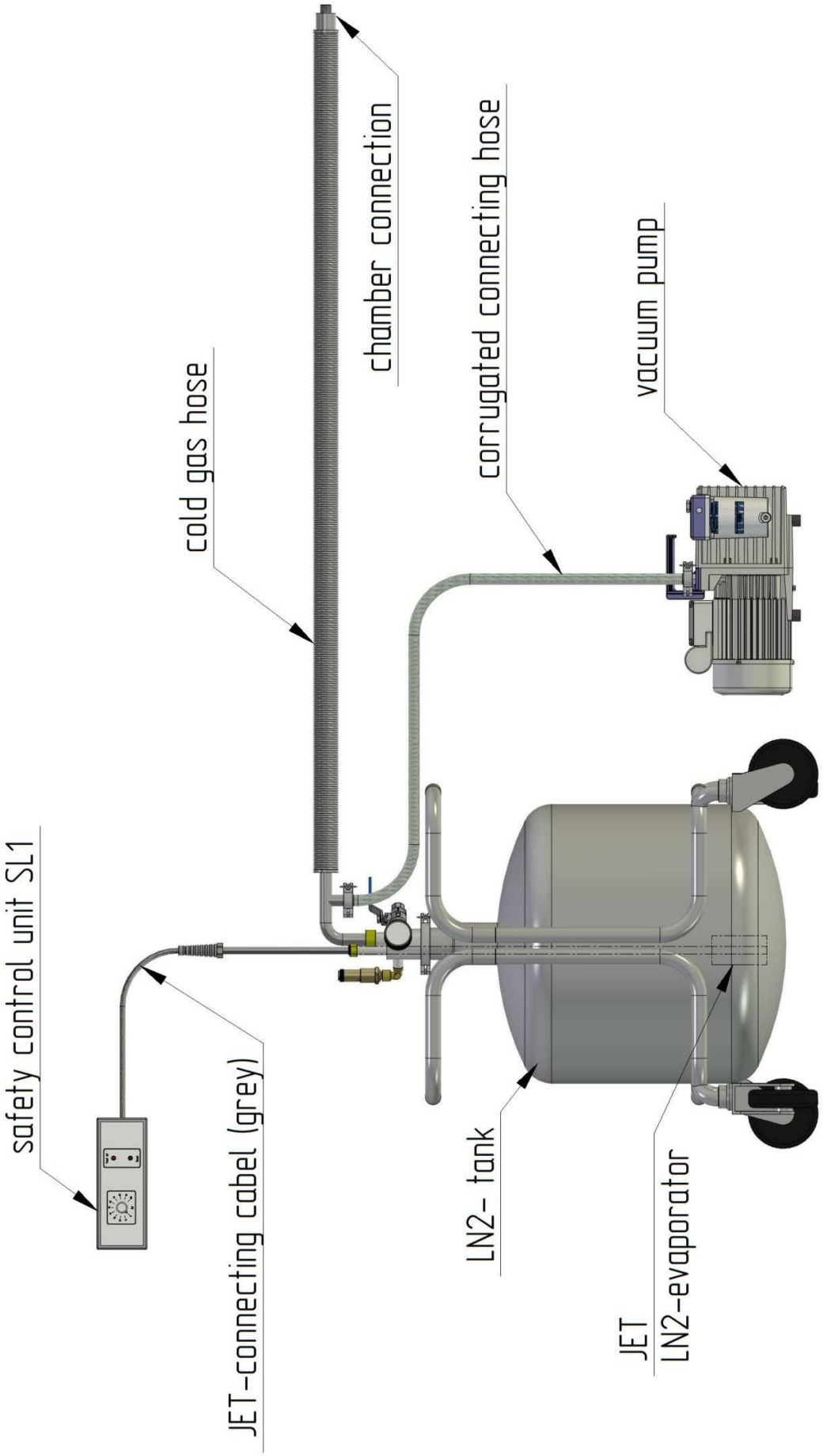
safety control unit SL1
JET-connecting cabel (grey)
cold gas hose
chamber connection
corrugated connecting hose
vacuum pump
LN2- tank
JET
LN2-evaporator

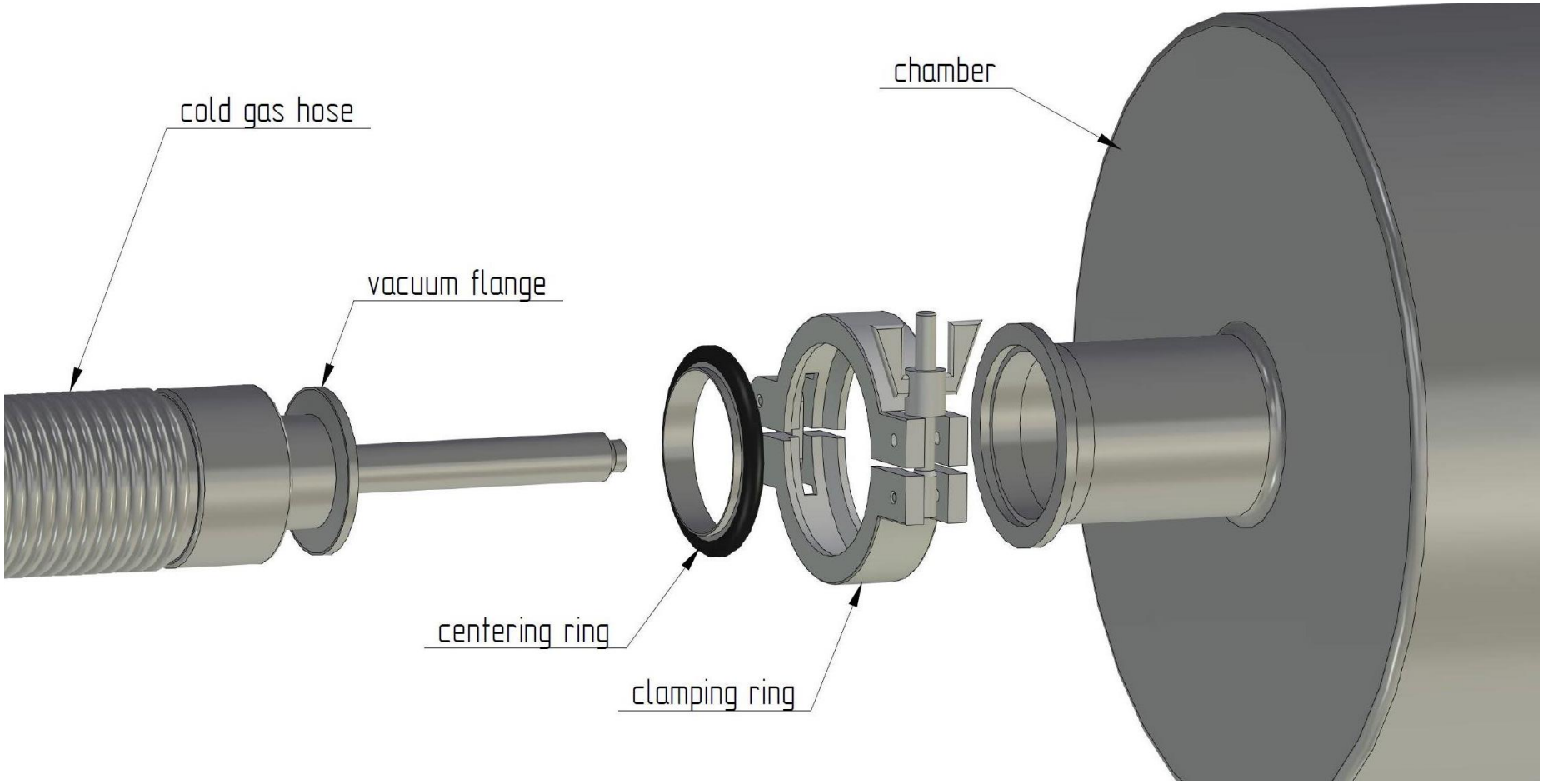
chamber
cold gas hose
vacuum flange
centering ring
clamping ring

18. Detail sketch of hose

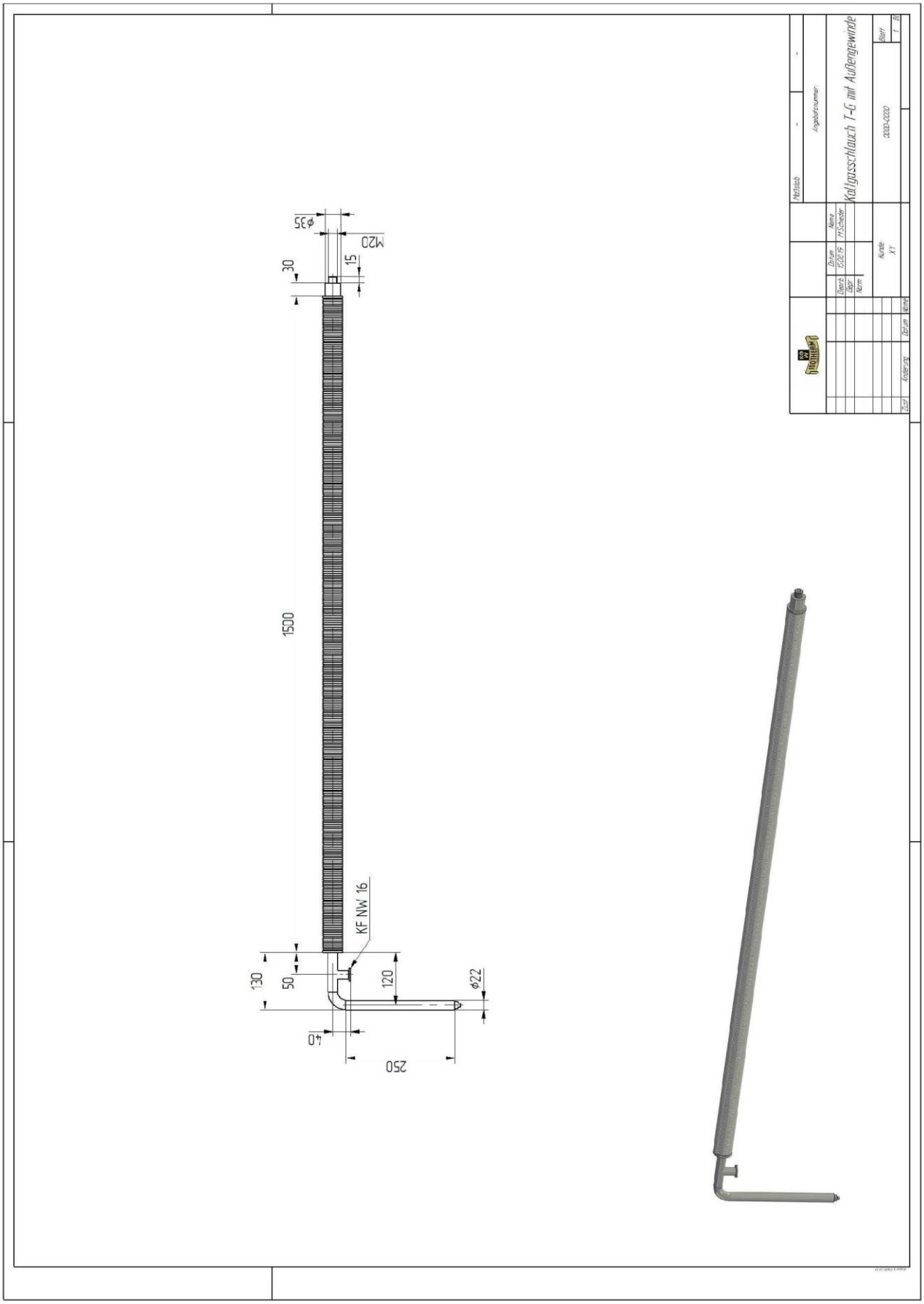

He-Leak test data

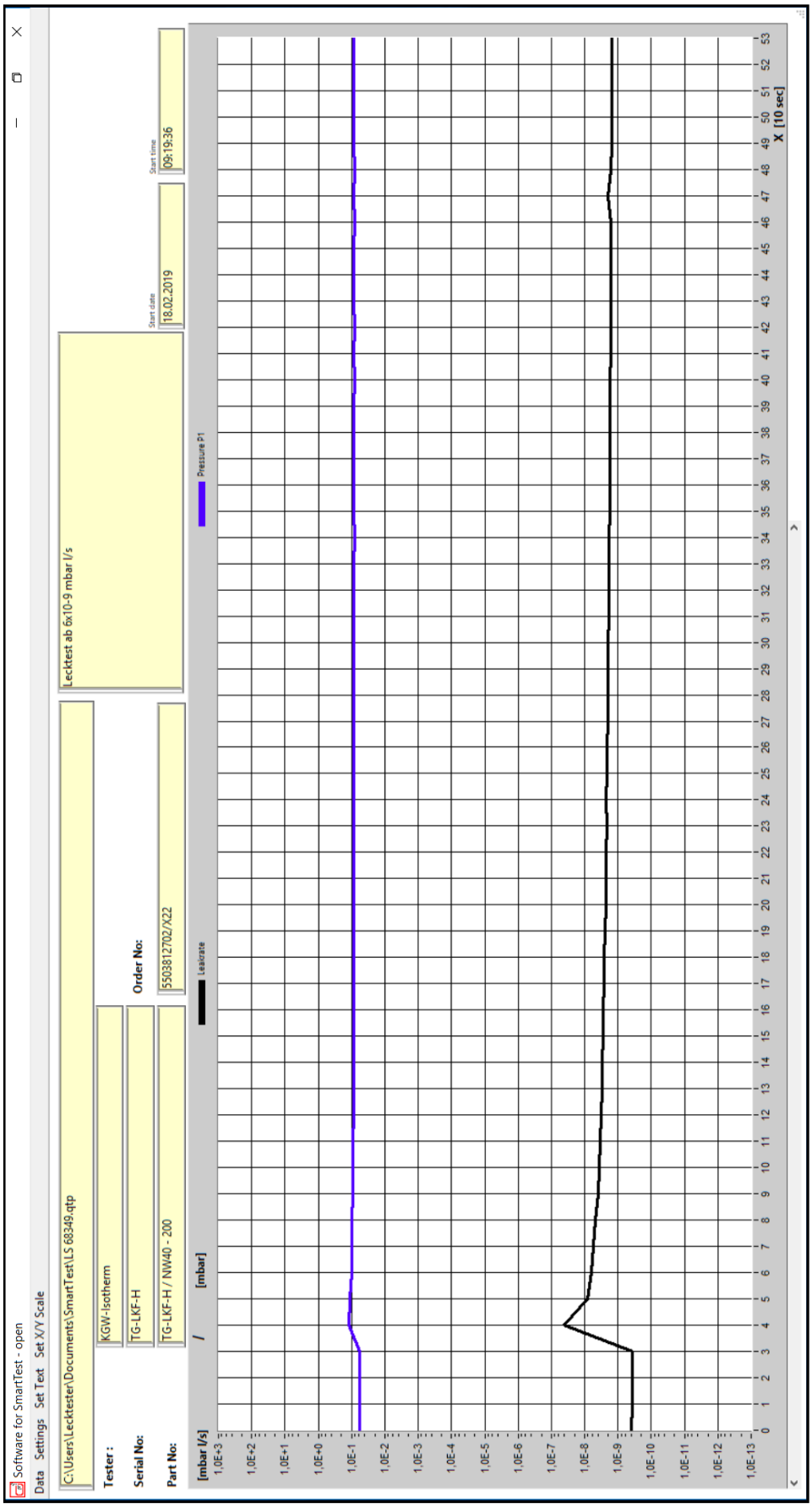

19. Test run

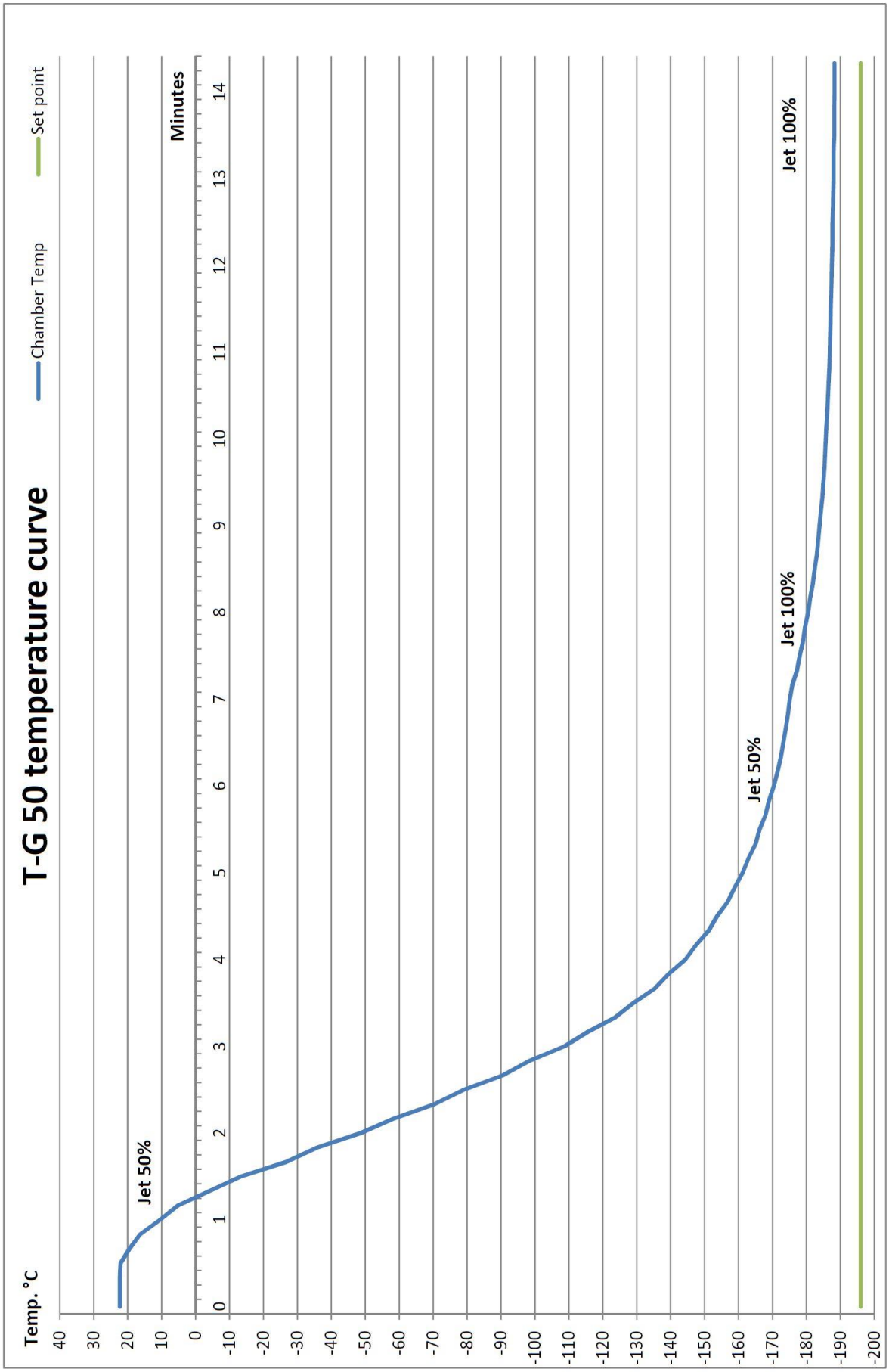
T-G 50 temperature curve
Temp. °C
Chamber Temp
Set point
Minutes
Jet 50%
Jet 50%
Jet 100%
Jet 100%
40
30
20
10
0
-10
-20
-30
-40
-50
-60
-70
-80
-90
-100
-110
-120
-130
-140
-150
-160
-170
-180
-190
-200
0
1
2
3
4
5
6
7
8
9
10
11
12
13
14